Owner's Manual and Instructions

Spark Ignition Infraconic Agricultural Building Radiant Heaters

MODELS	OUTPUT (Btuh)	FUEL
I17	17,100	L.P. Vapor Withdrawal or Natural Gas
I34	34,200	

MADE IN THE U.S.A.

Congratulations!

You have purchased the finest radiant heater available for the heating of livestock in agricultural animal confinement buildings.

Your new L.B. White radiant heater incorporates the benefits from the most experienced manufacturer of heating products using state-of-the-art technology.

We, at L.B. White, ***thank you*** for your confidence in our products and welcome any suggestions or comments you may have...call us toll free at 1-800-345-7200.

ATTENTION ALL USERS

This heater has been tested and evaluated by L.B. White Co., Inc. as a direct gas-fired radiant heater with intended use for the heating of livestock in agricultural animal confinement buildings. If you are considering using this product for any application other than its intended use, then please contact your fuel gas supplier, or the L.B. White Co., Inc.

Quality heaters you can count on.

W6636 L.B. White Rd., Onalaska, WI 54650 ■ (800) 345-7200 ■ (608) 783-5691 ■ (608) 783-6115, fax ■ info@lbwhite.com

150-22721-A

⚠ GENERAL HAZARD WARNING

- **Failure to comply with the precautions and instructions provided with this brooder, can result in:**
  - **Death**
  - **Serious bodily injury or burns**
  - **Property damage or loss from fire or explosion**
  - **Asphyxiation due to lack of adequate air supply or carbon monoxide poisoning**
  - **Electrical shock**
- **Read this Owner's Manual before installing or using this product.**
- **Only properly-trained service people should repair or install this brooder.**
- **Save this Owner's Manual for future use and reference.**
- **Owner's Manuals and replacement labels are available at no charge. For assistance, contact L.B. White at 800-345-7200.**

⚠ WARNING

- **Proper gas supply pressure must be provided to the inlet of the brooder.**
- **Refer to rating plate for proper gas supply pressure.**
- **Gas pressure in excess of the maximum inlet pressure specified at the brooder inlet can cause fires or explosions.**
- **Fires or explosions can lead to serious injury, death, building damage or loss of livestock.**
- **Gas pressure below the minimum inlet pressure specified at the brooder inlet may cause improper combustion.**
- **Improper combustion can lead to asphyxiation or carbon monoxide poisoning and therefore serious injury or death to humans and livestock.**

⚠ WARNING
Fire and Explosion Hazard

- **Not for home or recreational vehicle use.**
- **Installation of this brooder in a home or recreational vehicle may result in a fire or explosion.**
- **Fire or explosions can cause property damage or loss of life.**

FOR YOUR SAFETY

Do not store or use gasoline or other flammable vapors and liquids in the vicinity of this or any other appliance.

FOR YOUR SAFETY

If you smell gas:

1. **Open windows.**
2. **Don't touch electrical switches.**
3. **Extinguish any open flame.**
4. **Immediately call your gas supplier.**

⚠ WARNING
Fire and Explosion Hazard

- **Keep solid combustibles a safe distance away from the brooder.**
- **Solid combustibles include wood or paper products, feathers, straw, and dust.**
- **Do not use the brooder in spaces which contain or may contain volatile or airborne combustibles.**
- **Volatile or airborne combustibles include gasoline, solvents, paint thinner, dust particles or unknown chemicals.**
- **Failure to follow these instructions may result in a fire or explosion.**
- **Fire or explosions can lead to property damage, personal injury or loss of life.**

Table of Contents

SECTION	PAGE
General Information	3
Heater Specifications	4
Safety Precautions	5
Installation Instructions	
General	7
Gas Train Assembly	9
Filter Kit Instructions	
Installing Filter	9
Cleaning the Filter	10
Start-Up Instructions	11
Shut-Down Instructions	11
Cleaning Instructions	12
Maintenance Instructions	13
Service Instructions	
General	13
On/Off Switch	14
Ignition Module	14
Burner Orifice	14
High Voltage Ignition Lead	15
Igniter/Flame Sensor	16
Gas Control Valve	17
High Limit Switch	17
Gas Pressure Checks	18
Troubleshooting Guide	19
Electrical Connection and Ladder Diagram	23
Heater Component Function	24
Parts Identification	
Parts Schematic	25
Parts List	26
Warranty Policy	27
Replacement Parts and Service	27

General Information

This owner's manual includes all options and accessories commonly used on or with this heater. However, depending on the configuration purchased, some options and accessories may not be included.

When calling for technical service assistance, or for other specific information, always have the model number and serial number available.

This manual will instruct you in the operation and care of your radiant heater. Have your qualified installer review this manual with you so that you fully understand the heater and how it functions.

The gas supply line installation, and the repair, installation and servicing of the heater requires continuing expert training and knowledge of gas heaters and should not be attempted by anyone who is not so qualified. See page 6 for definition of the necessary qualifications.

Contact your local L. B. White distributor or the L. B. White Co., Inc. for assistance, or if you have any questions about the use of the heater or its application.

The L. B. White Co., Inc. has a policy of continuous product improvement. It reserves the right to change specifications and design without notice.

Radiant Heater Specifications

SPECIFICATIONS			Model I17	Model I34
Maximum Input (Btuh)			17,100	34,200
Ventilation Air to Support Combustion			200 CFM	400 CFM
Inlet Gas Supply Pressure at the Heater	FULL OUTPUT (On/Off Version)	MAX.	5 psig	
		MIN.	5 psig	
	ZONE CONTROLLED (Dual Solenoid Version)	MAX.	5 psig	
		MIN.	2.5 psig	
Burner Manifold Pressure at Maximum Pressure			5 psig	
Heater Dimensions (See Fig. 1)	"A"		16 7/8 in.	26 3/8 in.
	"B"		17 in.	20 1/4 in.
	"C"		8 3/4 in.	10 3/8 in.
Net Weight			8 lbs. 10 oz.	15 lbs. 8 oz.
Fuel Consumption Per Hour	L.P. GAS		.80 lbs./hr.	1.58 lbs./hr.
	NATURAL GAS		17.1 CFH	34.2 CFH
Electrical Supply (Volts/HZ/Phase)			120/60/1	
Amp Draw			0.5	
Animal Coverage Per Heater (1)	CHICKENS		1250 - 2000	2500 - 3800
	TURKEYS		350 - 500	800 - 950
	SWINE		125	300
Recommended Height Installation For Livestock From Point of Combustion Cone to Floor	CHICKENS		5 - 6 ft.	6 - 7 ft.
	TURKEYS		4 ft.	4.5 ft.
	SWINE		4 - 5 ft.	
Minimum Safe Clearances to Combustible Materials	TOP OF HOOD TO CEILING		3 ft.	
	POINT OF COMBUSTION CONE TO FLOOR		3.5 ft.	4.5 ft.
	SIDES		3 ft.	
Animal Occupied Zone Temperature Control Sensor Location (2)	POULTRY	VERTICAL FROM FLOOR	6-12 in.	
		HORIZONTAL FROM BROODER	8-12 ft.	
	SWINE	VERTICAL FROM FLOOR	Above Animal Height	
		HORIZONTAL FROM BROODER	4-8 ft.	

N/A - Not applicable.

(1) There are other factors that will affect the quantity of animals each heater can cover. These include building ventilation and control systems, building insulation, building size and population density, etc. Consult your L. B. White dealer or call L. B. White for specific recommendations for your application.

(2) This is typical sensor placement range. The size and type of livestock being grown, heater spacing and height, etc. will dictate sensor location. Care should always be taken to ensure that the sensor is sufficiently high as to not be damaged by the animal during operation.

FIG. 1

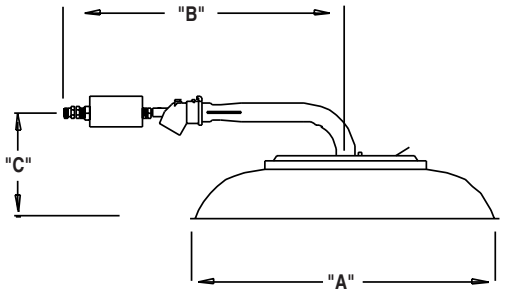

Safety Precautions

WARNING

Asphyxiation Hazard

- Do not use this radiant heater for heating human living quarters.
- Do not use in unventilated areas.
- The flow of combustion and ventilation air must not be obstructed.
- Proper ventilation air must be provided to support the combustion air requirements of the heater being used.
- Refer to the specification section of the Owner's Manual, heater's dataplate, or contact the L.B. White Company to determine combustion air ventilation requirements of the heater.
- Lack of proper ventilation air will lead to improper combustion.
- Improper combustion can lead to carbon monoxide poisoning in humans leading to serious injury or death. Symptoms of carbon monoxide poisoning can include headaches, dizziness and difficulty in breathing.
- Symptoms of improper combustion affecting livestock can be disease, lower feed conversion, or death.

FUEL GAS ODOR

LP gas and natural gas have man-made odorants added specifically for detection of fuel gas leaks.
If a gas leak occurs, you should be able to smell the fuel gas.
THAT'S YOUR SIGNAL TO GO INTO IMMEDIATE ACTION!

- Do not take any action that could ignite the fuel gas. Do not operate any electrical switches. Do not pull any power supply or extension cords. Do not light matches or any other source of flame. Do not use your telephone.
- Get everyone out of the building and away from the area immediately.
- Close all propane (LP) gas tank or cylinder fuel supply valves, or the main fuel supply valve located at the meter if you use natural gas.
- Propane (LP) gas is heavier than air and may settle in low areas. When you have reason to suspect a propane leak, keep out of all low areas.
- Natural gas is lighter than air and can collect around rafters or ceilings.
- Use your neighbor's phone and call your fuel gas supplier and your fire department. Do not re-enter the building or area.
- Stay out of the building and away from the area until declared safe by the firefighters and your fuel gas supplier.
- FINALLY, let the fuel gas service person and the firefighters check for escaped gas. Have them air out the building and area before you return. Properly trained service people must repair the leak, check for further leakages, and then relight the heater for you.

ODOR FADING -- NO ODOR DETECTED

- Some people cannot smell well. Some people cannot smell the odor of the man-made chemical added to propane (LP) or natural gas. You must determine if you can smell the odorant in these fuel gases.
- Learn to recognize the odor of propane (LP) gas and natural gas. Local propane (LP) gas dealers and your local natural gas supplier (utility) will be more than happy to give you a "scratch and sniff" pamphlet. Use it to become familiar with the fuel gas odor.
- Smoking can decrease your ability to smell. Being around an odor for a period of time can affect your sensitivity to that particular odor. Odors present in animal confinement buildings can mask fuel gas odor.
- The odorant in propane (LP) gas and natural gas is colorless and the intensity of its odor can fade under some circumstances.
- If there is an underground leak, the movement of gas through the soil can filter the odorant.
- Propane (LP) gas odor may differ in intensity at different levels. Since propane (LP) gas is heavier than air, there may be more odor at lower levels.
- Always be sensitive to the slightest gas odor. If you continue to detect any gas odor, no matter how small, treat it as a serious leak. Immediately go into action as discussed previously.

ATTENTION -- CRITICAL POINTS TO REMEMBER!

- Propane (LP) gas and natural gas have a distinctive odor. Learn to recognize these odors. (Reference "Fuel Gas Odor" and "Odor Fading" sections above.
- If you have not been properly trained in repair and service of propane (LP) gas and natural gas fueled heaters, then do not attempt to light the heater, perform service or repairs, or make any adjustments to the heater on a propane (LP) gas or natural gas fuel system.
- Even if you are not properly trained in the service and repair of radiant heaters, ALWAYS be consciously aware of the odors of propane (LP) gas and natural gas.
- A periodic "sniff test" around the heater or at the heater's joints; i.e. hose, connections, etc., is a good safety practice under any conditions. If you smell even a small amount of gas, CONTACT YOUR FUEL GAS SUPPLIER IMMEDIATELY. DO NOT WAIT!

1. Do not attempt to install, repair or service this heater or the gas supply line unless you have continuing expert training and knowledge of gas heaters.

   Qualifications for service and installation of this equipment are as follows:

   QUALIFICATIONS FOR SERVICING AND INSTALLATION:

   a. To be a qualified gas heater service person, you must have been trained in gas-fired heater servicing, repair and also have sufficient experience to allow you to troubleshoot, replace defective parts, and test heaters in order to get them into a continuing safe and normal operation condition. You must completely familiarize yourself with each model heater by reading and complying with the safety instructions, labels, owner's manual, etc. that is provided with each heater.

   b. To be a qualified gas installation person, you must have sufficient training and experience to handle all aspects of installing, repairing and altering gas lines, including selecting and installing the proper equipment, and selecting proper pipe size to be used. This must be done in accordance with all local, state and national codes as well as the manufacturer's requirements.

2. All installations or applications of L. B. White Co., Inc.'s radiant heater and associated zone control panel should meet the requirements of local, state and national L.P. gas and natural gas, electrical and safety codes. Your gas supplier, local licensed electrician, local fire department and government agencies can help you determine these requirements. In the absence of local codes, comply with the following:

   -- ANSI/NFPA 58, latest edition, Standard for Storage and Handling of Liquefied Petroleum Gas and/or
   -- ANSI Z223.1/NFPA 54, National Fuel Gas Code
   -- ANSI/NFPA 70, National Electrical Code.

3. If at any time you notice something unusual about the operation of your heater such as gas odor, overheating, flames other than in the combustion cone area, etc., evacuate the area immediately and call your fire department and your gas service agency. Get assurances from the fire department that the area is free of gas before you attempt to relight the heater.

4. The components on the heater that call for hand operation should work with hand pressure only. If more force is required, have a qualified gas heater service agency replace the complete part. Do not attempt to repair.

5. This heater is intended for the heating of livestock in agricultural animal confinement buildings only. The heater shall only be mounted inside the animal confinement building. It shall not be used for outside heating applications.

6. Do not locate fuel gas containers or fuel supply hoses anywhere within the heating zone of the heater.

7. Do not block the air intake, burner venturi tube or burner cone area. Doing so may cause improper combustion or damage to the heater components, leading to property damage or animal loss.

8. Do not move, handle, or service the heater while in operation or connected to fuel supply.

9. The hose assembly providing fuel to the heater must be inspected on a regular basis. This should be done at least once a year, or when the building is cleaned out. If it is evident there is excessive abrasion or wear, or if the hose is cut, it must be replaced prior to heater being put into operation. The hose assembly shall be protected from animals, building materials, and contact with hot surfaces during use. The hose assembly shall be that specified by the manufacturer. See parts list.

10. Check for gas leaks and proper function upon installation, before building repopulation and when relocating.

11. If the gas flow is interrupted and the burner flame is extinguished, immediately shut off the gas. Do not relight the heater until you are sure that all of the gas that may have accumulated through the brooder has cleared away. Do not relight the heater until at least five minutes have passed.

12. If the heater is to be relocated, make sure that all gas connections are capped and the gas supply is shut off. All connection points must be leak checked after disconnection and after reconnection.

WARNING

Burn Hazard

Can cause property damage, severe injury or death.

- The heater's combustion cones and canopy are extremely hot during operation and shortly after shutting down.
- Always be aware of your proximity to the heater and avoid contact with its hot surfaces during or shortly after operation.
- Failure to follow this warning can result in burns leading to severe personal injury.

13. The grower shall inspect the heater before building repopulation. Such inspection should consist of, but is not limited to, the following points of action:

-- Insure proper clearance of heater to nearest combustible materials.

-- Check for general cleanliness. Clean if necessary.

-- Check for tightness of the gas hose connections.

14. A qualified service person shall inspect the heater and its gas train on at least an annual basis. This should consist of, but is not limited to, the following points of action:

-- Start-up and shut down of the heaters and zone control panel to test for proper operation.

-- Leak check of all pipe joints and hose connections.

-- Thorough cleaning of the exterior of the heater, its inlet venturi, combustion cones and filter (if applicable).

-- Thorough inspection of the heater's component parts for corrosion, stripped threads, etc. with subsequent parts replacement as necessary.

-- Gas pressure checks.

15. Turn off the gas supply when the heater is not in use.

Installation Instructions

GENERAL

WARNING
Fire or explosion hazard.
Can cause property damage, severe injury or death.

To avoid dangerous accumulation of fuel gas, turn off the gas supply at the heater service valve before starting installation, and perform gas leak test after completion of installation.

1. Read all safety precautions and follow L. B. White recommendations when installing this heater. If during the installation or relocating of the heater, you suspect that a part is damaged or defective, call a qualified service agency for repair or replacement.

2. On initial installation and before use, position the brooder properly regarding clearance to combustible materials and ground clearance to protect the brooder from livestock. Hang the brooder with the control end 1 to 5 degrees down from horizontal. This is necessary to protect the filter and control enclosure from heat damage as well as providing proper venting to ensure good combustion. Refer to the specification table on page 4 as well as Figure 2 for installation information for proper hanging and clearances.

3. Position the gas hose outside of the hot zone directly above the heater. Position the gas hose to avoid any opportunity for contact with the hot canopy surface of the heater. Refer to Fig. 2.

4. Insure that all accessories that ship with the heater have been removed from inside of heater's shipping container and installed. This pertains to gas hose, regulators, etc.

5. The heater's gas regulator (with pressure relief valve) should be installed outside of building. Typically any regulators inside the buildings must be properly vented to the outside. However, local, state and national codes always apply to regulator installation.

6. It is extremely important that any regulator outside the building be protected against the weather, particularly ice formation. Ice formation can lead to overpressurization of the regulator and subsequent gas leaks. See codes covering proper protection.

7. Always use pipe joint compound that is resistant to liquefied petroleum gas and natural gas.

8. Check all connections for gas leaks using approved gas leak detectors. Gas leak testing is performed as follows:

WARNING
Fire and Explosion Hazard

- Do not use open flame (matches, torches, candles, etc.) in checking for gas leaks.
- Use only approved leak detectors.
- Failure to follow this warning can lead to fires or explosions.
- Fires or explosions can lead to property damage, personal injury or loss of life.

-- Check all pipe connections, hose connections, fittings and adapters upstream of the gas control with approved gas leak detectors.

-- In the event a gas leak is detected, check the components involved for cleanliness and proper application of pipe compound before further tightening.

-- Furthermore tighten the gas connections as necessary to stop the leak.

-- After all connections are checked and any leaks are stopped, turn on the main burner.

-- Stand clear while the main burner ignites to prevent injury caused from hidden leaks that could cause flashback.

-- With the main burner in operation, check all connections, hose connections, fittings and joints as well as the gas control valve inlet and outlet connections with approved gas leak detectors.

- If a leak is detected, check the components involved for cleanliness in the thread areas and proper application of pipe compound before further tightening.

- Tighten the gas connection as necessary to stop the leak.
- If necessary, replace the parts or components involved if the leak cannot be stopped.

- Ensure all gas leaks have been identified and repaired before proceeding.

9. A qualified service agency must check for proper operating gas pressures upon installation of the heaters.

10. It is extremely important to use the proper gas supply line to assure proper functioning of the heaters. Typically, 1/2 in. ID black iron pipe is used to convey the gas to the heaters. However, always consult your fuel gas supplier, or the L. B. White Co., Inc. for proper line sizing and installation.

11. Infraconic heaters require a regulated gas supply to the gas inlet of the product. Exceeding the gas inlet pressure rating can result in poor performance and unreliable operation. Refer to page 4 of this manual for information on gas pressures relating to specific models.

12. The heater is designed for either L.P. vapor withdrawal or natural gas, depending on model number. Do not use this heater in an LPG liquid withdrawal system. Do not permit LPG in liquid form to enter the heater at any time.

13. The corrosive atmosphere present in animal confinement buildings can cause component failure or heater malfunction. The heater should be periodically inspected and cleaned in accordance with the Maintenance and Cleaning Instructions in this manual. Make sure that livestock is protected by a back up alarm system that limits high and low temperatures and also activates appropriate alarms.

14. Take time to understand how to operate and maintain the heater using the owner's manual. Make sure you know how to shut off the gas supply to the building and to the individual heaters. Contact your gas supplier if you have any questions.

15. Any defects found in performing any of the service procedures must be eliminated and defective parts replaced immediately. Retest the heater before placing it back into service.

ATTENTION

- Model I17 heaters utilize an integral chain hanging bracket located on the heater's venturi tube. Model I34 heaters use chain hanging clips.

- Regardless of hanging system, the installer must make sure that the heater is installed so control end of heater is positioned 1° to 5° down from horizontal after gas supply hose is attached.

- Repositioning of factory installed key ring into hanging bracket (for I17) or adjustment of chain for I34 may be required.

- Refer to following illustrations.

FIG. 2

INSTALLATION LAYOUT
FOR SAFE CLEARANCES

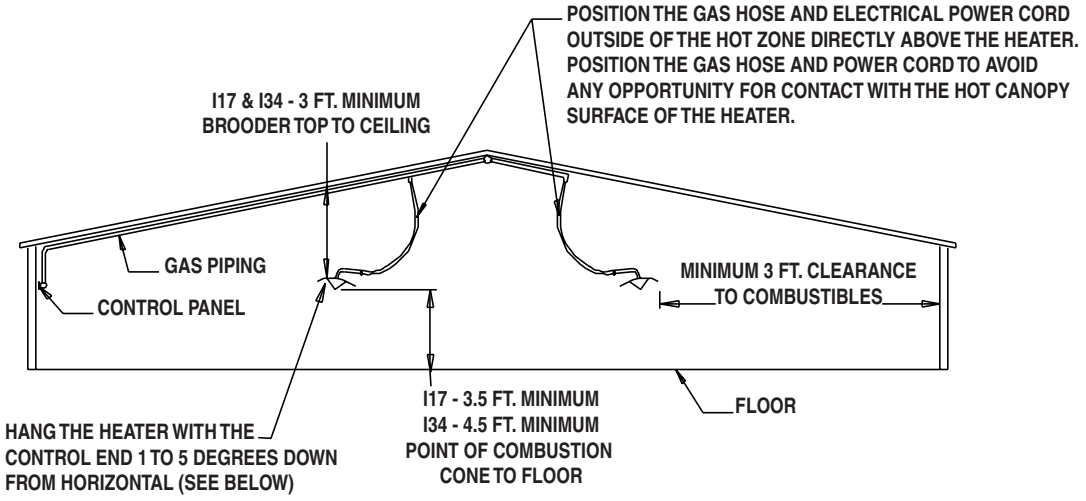

MODEL I17

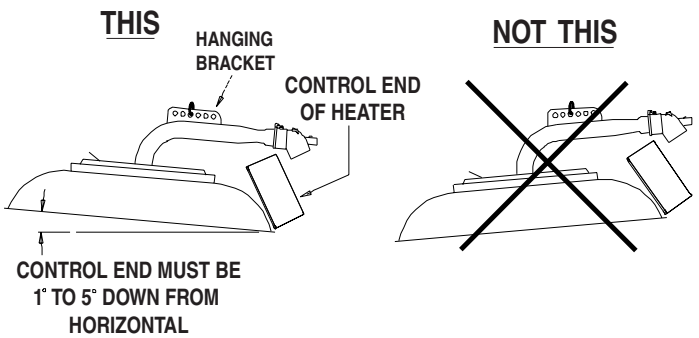

MODEL I34

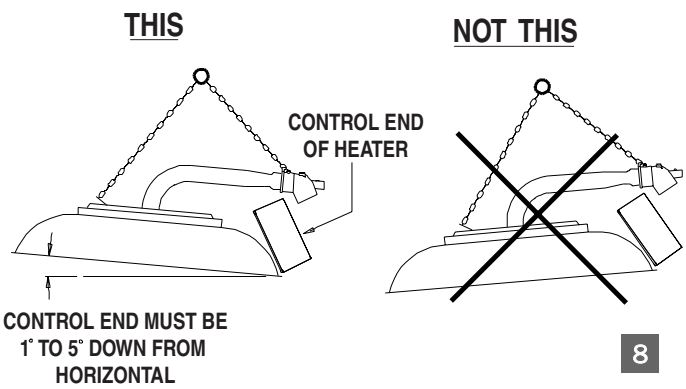

GAS TRAIN ASSEMBLY

1. Thread the bushing into one end of manual shut off valve. Use pipe thread compound at this connection and tighten securely.

2. Thread the rigid end of the hose into the bushing. Use pipe thread compound at this connection and tighten securely.

3. Thread other end of gas hose with fitting to the adapter at inlet of gas control valve on heater. Tighten securely.

4. Connect the gas supply to inlet of manual gas shut off as required by local codes.

ATTENTION

- The control end of the heater must be down 1 to 5 from horizontal. Refer to Fig. 2 on Page 8 for proper hanging and installation information.

FIG. 3

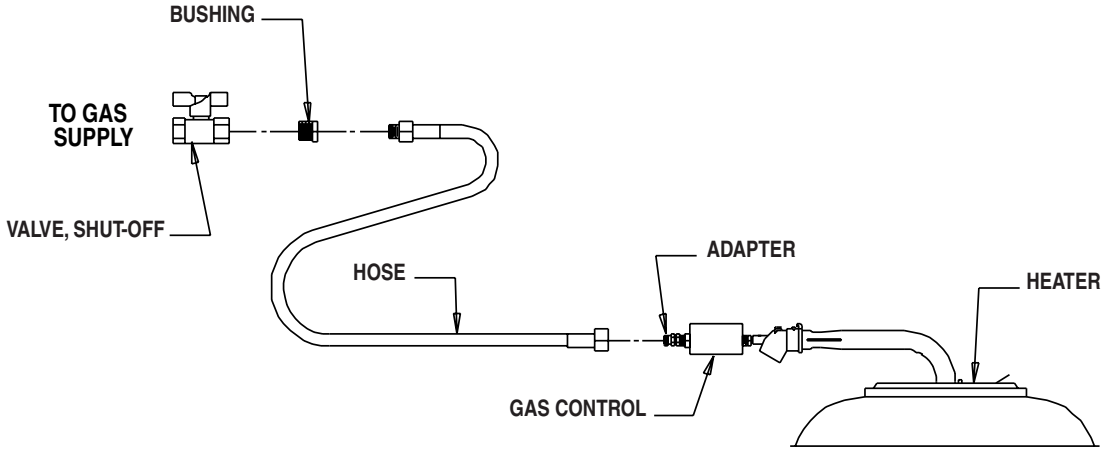

Filter Instructions

INSTALLING FILTER

1. Position the filter sleeve onto the injector body. Fasten the sleeve to the body by pushing the slots of the sleeve onto the tabs of the body. Rotate the sleeve so it locks into place on the injector body. See Fig. 4.

2. Expand the elastic on the filter and slide the filter over the sleeve. Make sure the elastic of the filter is covering the top of the sleeve and that the seam of the filter is perpendicular to the canopy edge of the heater. See Fig. 4. Filter sleeve holes will not be exposed when the filter is properly installed.

ATTENTION

MODEL I17 HEATERS

- There will be a snug fit of the filter against the control box after filter installation.

3. After installation, make sure that the filter does not sag or touch the canopy of the heater.

4. The operating position of the heater must allow for a tilt of the canopy of between 1° (min.) and 5° (max.) from the filter end of the heater. The tilt angle is necessary to allow proper venting of combustion by-products from the heater as well as minimize convective and radiant heat to the filter element.

(Frequency of cleaning will depend upon livestock being raised and overall condition of the building.)

⚠ CAUTION

- Never allow the filter to become fully clogged with dust and dirt.
- A dust choked filter will restrict the combustion air, causing improper combustion.
- Signs of improper combustion include: backflashing of flame into the venturi tube, yellowing of the flame within the burner cone, presence of blue and/or yellow flames outside of the outer cone or carbon sooting on the underside of the canopy.
- At first signs of any of these conditions, clean the filter.

1. During Each Flock — Remove the filter and shake out the dust. Reinstall the filter according to previous instructions.

ATTENTION

- Do not squeeze or tap the filter while the heater is in operation.
- Doing so will allow dust to be ingested within the venturl tube and cones.
- Shut the heater off and remove filter in its entirety and shake out dust

2. After Each Flock — If necessary, remove the filter and use compressed air and/or water to clean the filter. Make sure to squeeze out any excess water from the filter before reinstalling the filter back onto the filter sleeve. DO NOT USE A PRESSURE WASHER TO CLEAN THE FILTER. DO NOT WASH IN A WASHING MACHINE. High pressure, either water or air, can tear the filter material. Use standard faucet pressure only. Clean the venturi tube and cones if necessary using pressurized air and/or water. Refer to the cleaning instruction guidelines in this Owner's Manual. Let the heater and filter dry completely before lighting.

FIG. 4

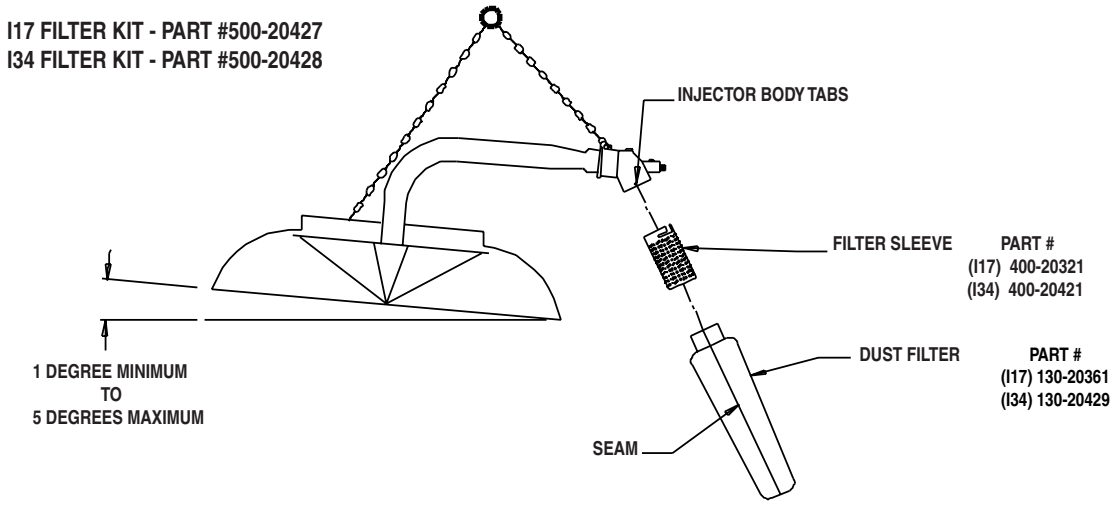

Start-Up Instructions

Follow steps 1-5 on initial start up after heater installation by a qualified gas heater service person. For normal startup, simply turn the building thermostat above room temperature.

1. Connect the heater to an approved electrical supply and building's temperature control system.

2. Open all gas supply valves to the heater and check for gas leaks at all connections using approved leak detectors.

3. Energize the building's temperature control system to provide power to the heater.

4. Position the ON/OFF switch on the heater's control box to ON. See Fig. 5. Refer to label near switch. The igniter will spark and ignition will occur.

5. Set the building's temperature control to desired temperature.

ATTENTION

- It is normal for air to be trapped in the gas line on new installations.
- The heater may attempt more than one ignition trial before air is purged from the line and ignition occurs.

This heater includes a spark ignition control module for purposes of controlling the timing of the ignition process of the heater as well as monitoring the safety functions. The control module is located in a control box at the gas inlet end of the heater. On a call for heat, the igniter will spark and the gas control valve will open shortly afterward. The igniter will continue to spark for approximately 10 seconds. Flame sense, as monitored by the ignition control, will keep the gas valve open and main burner in operation until proper temperature is achieved.

The ignition control module will make up to 3 trials for ignition. There will be a 15 second time span between each ignition trial. If ignition is not achieved after the third trial, a 15 minute wait period will occur. After the 15 minute time span has elapsed, the heater will make three more trials for ignition. This process will continue as long as there is a call for heat from the building's temperature control system.

FIG. 5

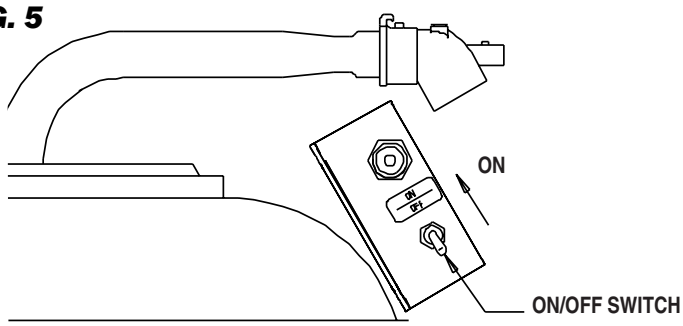

Shut-Down Instructions

The building's environmental temperature control system will shut the heater down after proper temperature has been achieved.

If heater is to be shut down for cleaning, maintenance or repair, follow steps 1-4.

1. Shut off all gas supply valves to the heaters.

2. Allow heaters to burn off fuel gas remaining in the gas supply line.

3. Position the ON/OFF switch to OFF.

4. Disconnect the heater from its electrical supply.

Cleaning Instructions

It is important to clean the heater on a regular basis to maintain proper combustion and to eliminate future problems.

The frequency of cleaning will vary depending upon livestock being raised and overall ventilation of the building.

ATTENTION

Combustion problems associated with lack of cleaning typically are:

- Sooting on inside of canopy.
- Burner flame appearing beyond outer cone.

CLEANING WITH BACKPACK BLOWERS AND HEATER BLOWER

Blower Part No. 130-21170

For general cleaning when the heaters do not have heavy accumulations of dust or dirt, use either a backpack type of blower or the heater blower.

Follow the same procedures for cleaning as listed for "Cleaning with Compressed Air".

If the dust and dirt cannot be removed effectively using the backpack blower or heater blower, then clean the heater using either the "Compressed Air" or "Water Cleaning" methods.

CLEANING WITH COMPRESSED AIR

1. Turn off the gas supply to the heater and let the heater cool down until you can no longer feel heat coming from the heater canopy or combustion cones.

2. Using a soft bristle brush, brush off all exterior surfaces of the heater. Pay particular attention to the air inlet hole on the injector body.

3. Turn on the compressed air and point the nozzle directly at the combustion cones, working your way around entire surface of cone assembly. This procedure may take about a minute or slightly longer depending on amount of dust or dirt on combustion cones. See Fig. 6.

4. Shoot compressed air through air inlet opening in the venturi tube to blow back out any loosened dust through combustion cones.

5. Repeat Steps 3 and 4 until the cones and the venturi tube are no longer emitting dust.

6. Visually inspect the cones and venturi tube to make sure these areas are clean.

7. Return the heater to its normal hanging position.

8. Relight the heater.

FIG. 6

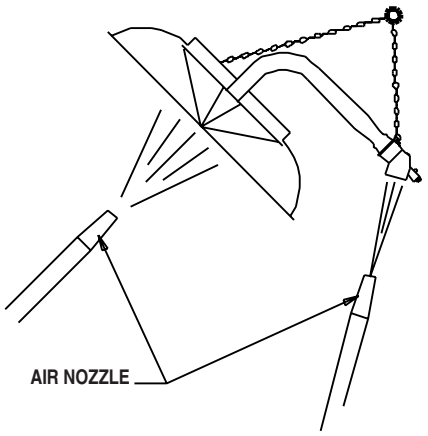

Maintenance Instructions

1. Have your gas supplier check all gas piping annually for leaks or restrictions in gas lines. Also, at this time have your gas supplier clean out the sediment trap on the zone control panel of any debris that may have accumulated.

2. The appliance area shall be kept clear and free from combustible materials, gasoline, and other flammable vapors and liquids.

3. Regulators can wear out and function improperly. Have your gas supplier check the date codes on all regulators installed and check delivery pressures to the appliance to make sure that the regulator is suitable for continued use.

4. Regulators must be periodically inspected to make sure the regulator vents are not blocked. Debris, insects, insect nests, snow, or ice on a regulator can block vents and cause excess pressure at the appliance.

5. For safety as well as for optimum performance at the heater, it is necessary to keep the inside and the outside of the heater free of dust, dirt or any combustible material. If any operational component shows signs of rust or corrosion, replace the component immediately.

6. If any warning or instruction labels, dataplates, etc. become lost or hard to read, replace them immediately. Do not operate the heater until you have all instructions and can read and understand them.

7. Check overall condition of heater for cracked or damaged components, loose screws or bolts, etc. Replace any suspect components.

8. Check all hose and tubing assemblies for cracks, abrasions or ruptures. Replace any hoses that are suspect.

IMPORTANT

If it becomes apparent that a dark spot has formed part way up on the inner combustion cone or a build up of debris is occurring in the bottom of the inner cone, it will be necessary to clean out the combustion cone assembly. Refer to “Cleaning Instructions”.

Service Instructions

GENERAL

1. Disconnect the gas supply to heater before attempting to service unless it is necessary to have it connected for your service procedure. Use special care to avoid being burned by hot surfaces or make sure the heater is cool to touch before servicing.

2. Do not attempt to repair any part that comes in contact with the gas such as the hose and combustion cones, etc. Replace them.

3. Do not attempt to disassemble or repair any of the following parts: valves of any kind, regulators, thermostats, electronic devices, switches, safety devices, hose assemblies, etc. Replace them.

4. After any repairs are made, always restart the heater to make sure it operates properly. Refer to “Start Up Instructions” within this Owner’s Manual.

5. For help in servicing this heater see the Trouble-shooting Guide within this Owner’s Manual or call the manufacturer. Some of the manufacturers of components parts will provide additional information on their products. Consult these materials if applicable.

NOTE: The shroud and combustion cones typically do not require removal from the heater assembly. Other basic components of the heater are easily serviced by following these procedures.

ON/OFF SWITCH

1. Disconnect the heater from its electrical supply.
2. Close fuel supply valves to heater..
3. Remove filter and filter sleeve (if applicable). Remove the screws that secure the control box cover to the control box and lift cover from box.
4. Disconnect the electrical leads from the ON/OFF switch.
5. Using the appropriate wrench, remove the rubber boot from the ON/OFF switch. See Fig. 7.
6. Remove the switch from the control box.
7. To re-assemble, reverse these procedures.

FIG. 7

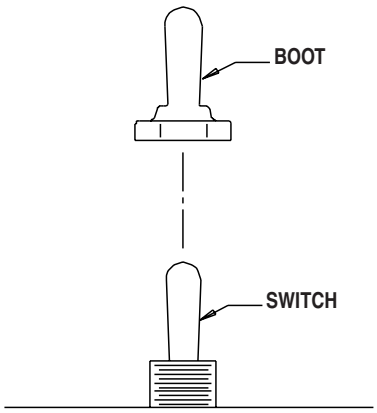

IGNITION MODULE

ATTENTION

When removing or replacing the ignition control module it is important to handle the module at the edges of the board. Do not touch or allow any contact to the module components. Doing so may damage the electronics of the module.

1. Disconnect heater from its electrical supply.
2. Close fuel supply valves to heater.
3. Remove dust filter and filter sleeve.
4. Remove the screws that secure the control box cover to the control box and lift cover from box.
5. Disconnect all electrical leads from the ignition control terminals.
6. Disconnect high voltage ignition lead.
7. Remove the screws which secure the ignition control module to the control box. See Fig. 8.
8. To re-assemble, reverse these procedures.

FIG. 8

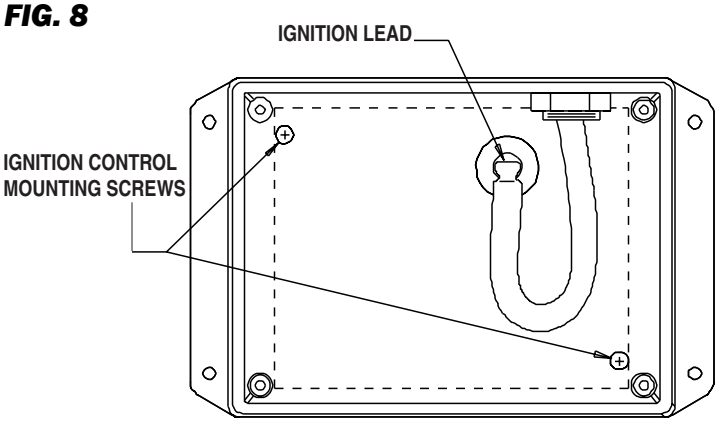

BURNER ORIFICE

1. Close fuel supply valves to the inlet of heater.
2. Disconnect the heater from its electrical supply.
3. Remove the screw which secures the venturi neck and valve ground lead to the venturi tube.
4. Remove injector body with gas control from venturi tube.
5. Using a 6 mm hex nut driver, remove the orifice head from the orifice body by turning counter-clockwise.
6. Use compressed air to clean the orifice hole. Do not push or poke any small file, broach, etc. through orifice holes. Doing so may enlarge the hole, causing combustion problems. Reinstall orifice head back into the orifice body. Make sure you do not overtighten the orifice as overtightening can strip the threads in the injector body.

FIG. 9

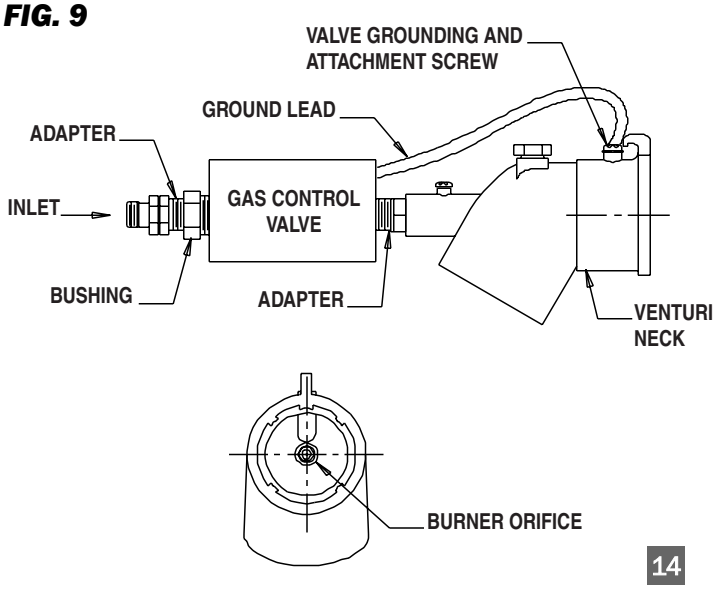

HIGH VOLTAGE IGNITION LEAD

1. Disconnect heater from its electrical supply.
2. Close fuel supply valves.
3. Remove filter and filter sleeve.
4. Remove the control box cover.
5. Disconnect the igniter lead from ignition module.
6. Loosen the nut on the water tight connection through which ignition lead is fed. See Fig. 10.
7. Pull the ignition lead through this connection.
8. Pull the boot of the ignition lead up and back from the igniter along the lead to expose the igniter to ignition lead connection point. See Fig. 10.
9. Disconnect the high voltage ignition lead.
10. Remove the connector nut from the ignition cable. This same nut will be slid over the replacement ignition cable and used to create a water tight connection at the control box. Tighten the nut securely.

ATTENTION

- Before tightening the nut on the water tight connection, make sure to pull any excess ignition lead through the water tight connection and into the control box.
- This prevents the lead from coming into contact with the hot surface of the heater.

11. To reassemble, reverse these procedures.

FIG. 10

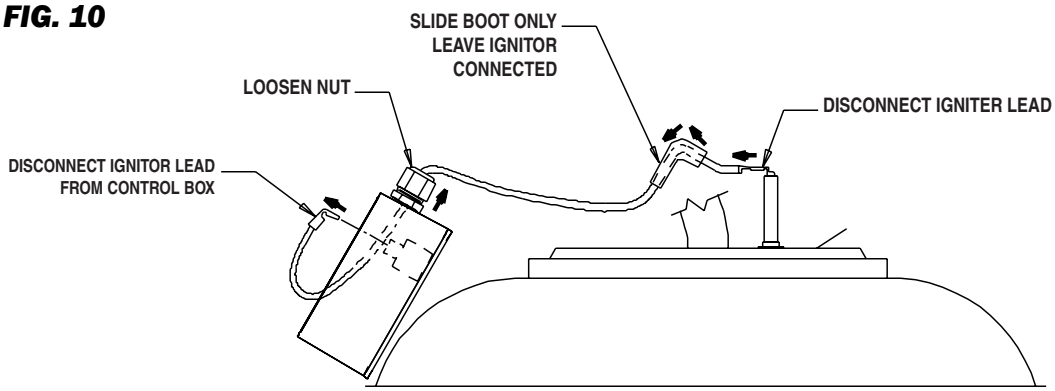

1. Disconnect the heater from its electrical supply.
2. Close fuel supply valves to heater.
3. Pull the boot of the ignition lead up and back from the igniter along the lead to expose the igniter to ignition lead terminal. If the ignition cable terminal disconnects as the boot is being pulled back, use a needle nose pliers to retrieve the terminal and pull it back through the igniter end of the boot. See Fig. 11.
4. Disconnect the lead from the igniter.
5. Remove the screws which secure the igniter and it's mounting cover to the heater top.
6. Remove the igniter from the heater. The igniter rod and its insulating ceramic body must be rigid within its mounting bracket. If the igniter rod or its body are capable of movement, the igniter will not be properly positioned to the combustion cone. The igniter must then be replaced.
7. Clean the igniter rod with steel wool or emery cloth.
8. Reattach the igniter and the cover into the heater top. Tighten Securely.
9. Restart the heater according to the start up instructions on page 11.

ATTENTION

- To adjust igniter gap, remove outer combustion cone.
- Use pliers to support the igniter rod near ceramic insulator.
- Carefully bend electrode to achieve proper ignition gap. See Fig. 12.

FIG. 11

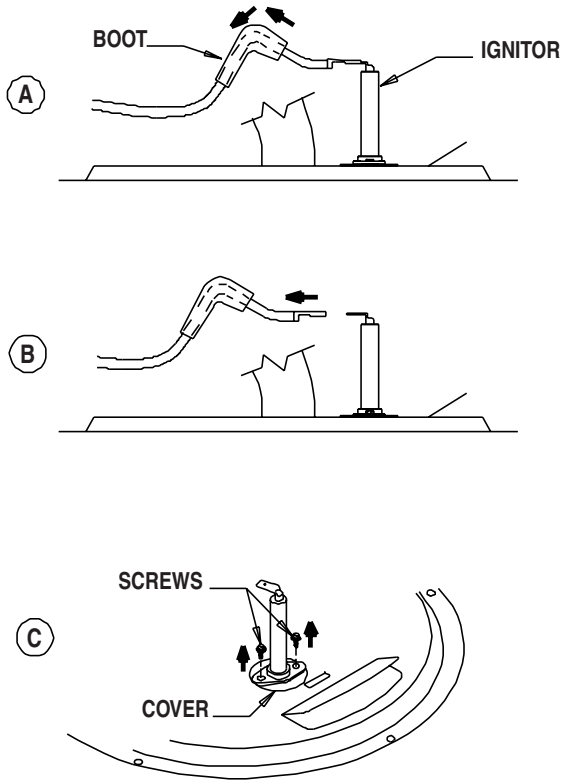

FIG. 12

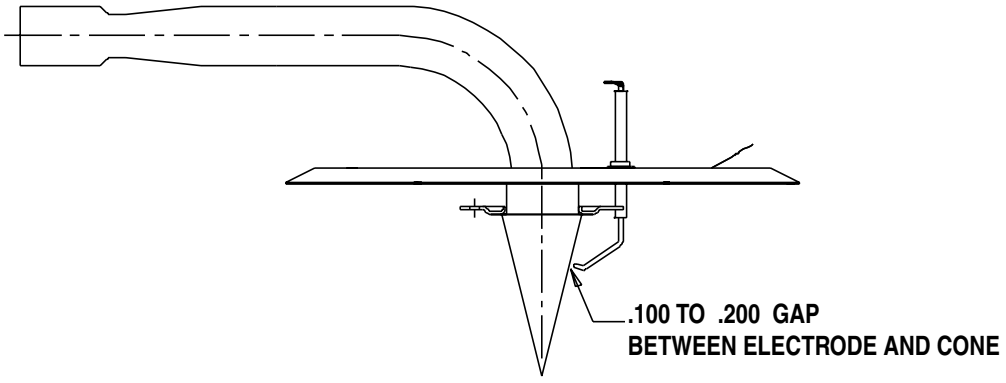

HIGH LIMIT SWITCH

ATTENTION

- This heater is equipped with a manual reset high limit switch. Its purpose is to disconnect the electrical supply to the ignition control board in the event of an overheat condition.

- An overheat condition is normally caused by:
  - Excessive fuel gas pressure
  - Heater not being routinely cleaned
  - Heater not properly hung. (Control end is 1° to 5° down from horizontal. See page 8.

The high limit switch should be tested a minimum of once per year or anytime the heater is taken down for servicing. Refer to the following testing instructions.

WARNING
Fire Hazard

- Do not operate the heater with the high limit switch bypassed.
- Operating the heater with a bypassed high limit switch may lead to overheating, possibly resulting in a fire, with subsequent damage to the heater, building damage, or loss of livestock.

1. Disconnect the heater from its electrical supply.
2. Remove the high limit switch from the control box.
3. Holding the switch by one of its mounting legs, apply a small flame only to the sensing portion on the back of the switch. **Be careful not to melt the plastic housing of the switch when conducting this test.**
4. Within a minute, you should hear a "pop" coming from the switch, which indicates the contacts of the switch have opened.
5. Allow the switch cool down before firmly pressing the reset button on the switch.
6. Check for electrical continuity across the switch terminals to make sure the contacts have closed.
7. Reinstall the switch back into the heater. Reconnect the heater to its electrical supply. Start the heater and check for proper operation.

FIG. 13

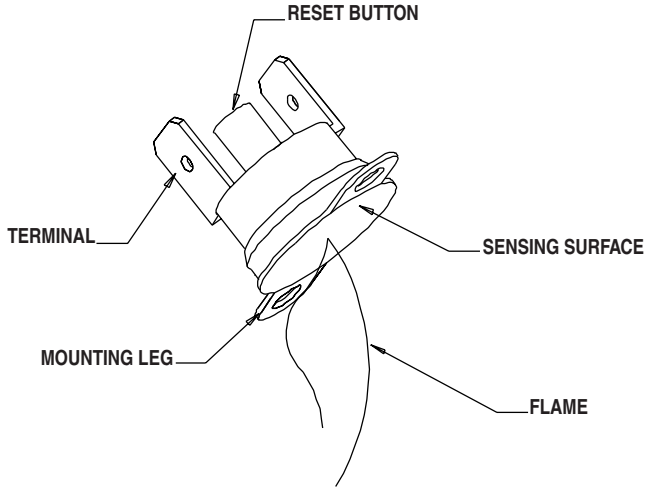

GAS CONTROL VALVE

1. Disconnect the heater from its electrical supply.
2. Close fuel supply valves to heater.
3. Remove dust filter and filter sleeve.
4. Brush or blow off any dust in vicinity of gas control valve.
5. Disconnect the gas hose from hose adapter at inlet of gas control.
6. Using the appropriate wrench, remove bushing with hose adapter from control valve inlet. See Fig. 14.
7. Using appropriate wrenches, hold the gas valve adapter at the outlet of the gas control in place while loosening the control valve body from the adapter.
8. Remove the control box cover.
9. Loosen the nut of the water tight connector through which the ground and power supply leads of the control valve pass.
10. Disconnect the valve's electrical leads from the ignition module.
11. Route the valve leads individually through this connector.
12. Save the water tight connector nut from the valve leads. This same nut will be slid over the leads of the replacement valve and used to create a water tight connection at the control box.
13. Loosen the screw at the injector body and disconnect the valve's electrical leads. See Fig. 14.

FIG. 14

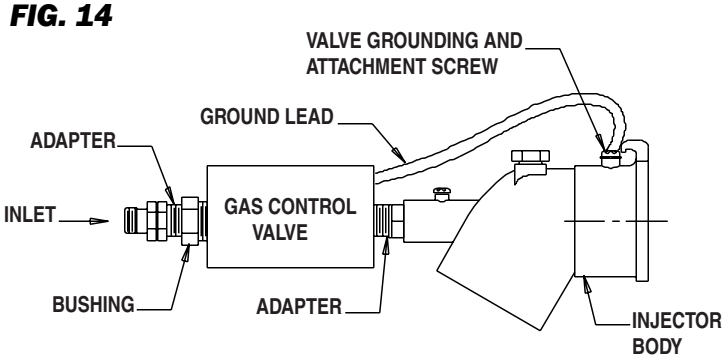

14. Reverse these procedures for valve installation.

WARNING
Fire and Explosion Hazard

- Do not disassemble the gas control valve.
- Do not attempt to replace any components on the gas control valve.
- The gas control valve must be replaced if any physical damage occurs to the control valve assembly.
- Failure to follow this warning will result in fire or explosions, leading to injury or death to humans and livestock, and building damage.

ATTENTION

- The following explains a typical procedure to be followed in checking gas pressures.
- Consult the dataplate on the heater or page 4 in this manual for specific pressure to be used in conjunction with this procedure.

A. Preparation

1. Obtain an L.B. White pressure gauge test kit - Part No. 500-20736.
2. Disconnect the heater from the electrical supply and close the fuel supply valve to the heater.
3. Brush or blow off any dust and dirt on or in the vicinity of the gas control valve.
4. Disconnect the gas hose from the heater.

B. Gauge Installation

ATTENTION

- Insure both gas shut-off valves on the test kit are in the closed position when connecting the kit to the heater and gas supply.

1. Connect the pressure test kit hose to the fitting at the inlet of the gas control valve. Tighten securely. See Fig. 15.
2. Connect the gas supply hose to the hose fitting on the test kit. Tighten securely. See Fig. 15.
3. Reconnect the heater to its electrical supply.
4. Open the main fuel supply valve to the heater.
5. Open only the gas shut-off on the test kit to which the main gas supply is connected.
6. Start the heater.

C. Reading Pressures

1. With the heater operating, the pressure gauge should read the pressure specified on the dataplate.
2. Does the reading on the gauge of the test kit agree with that specified on the dataplate? If so, then no further checking or adjustment is required. Proceed to Section D.
3. If the pressure does not agree with that specified on the dataplate, then the regulator controlling gas pressure to the heaters requires adjustment.

D. Completion

1. Once gas pressure has been confirmed and/or properly set, close the fuel supply valve to the heater and allow the heater to burn off any gas remaining in the gas supply line.
2. Disconnect the heater from its electrical supply.
3. Remove the gauge kit.
4. Reconnect the heater's gas hose to the heater. Tighten securely.
5. Reconnect the heater to its electrical supply.
6. Open the main fuel supply valves to the heater and check for gas leaks.

FIG. 15

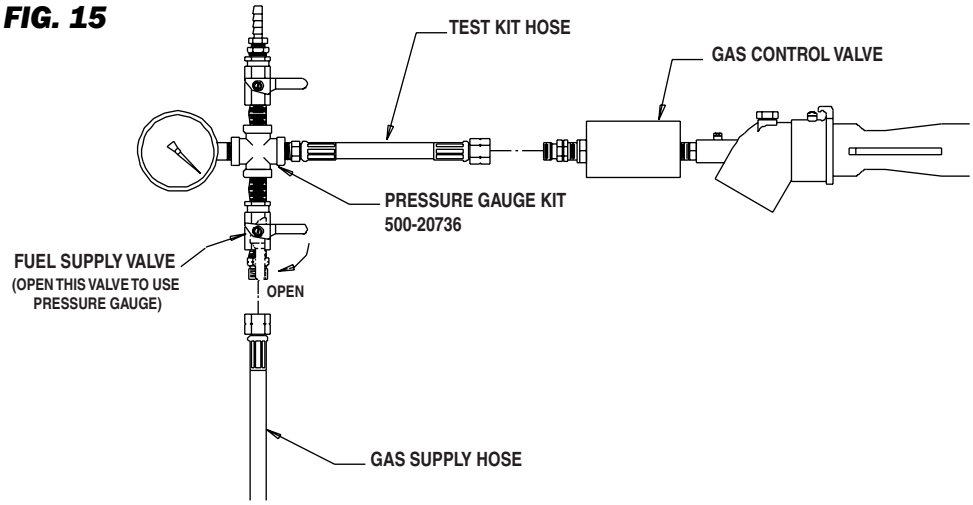

Troubleshooting Guide

READ THIS ENTIRE SECTION BEFORE BEGINNING TO TROUBLESHOOT PROBLEMS.

The following troubleshooting flow charts provide systematic procedures for isolating heater problems. The charts are intended for use by a QUALIFIED GAS HEATER SERVICE PERSON. DO NOT SERVICE THE HEATER UNLESS YOU HAVE BEEN PROPERLY TRAINED.

TEST EQUIPMENT REQUIRED

The following pieces of test equipment will be required to troubleshoot this system with minimal time and effort.

- Digital Multimeter - For measuring AC voltage.
- High Pressure Gauge - (L. B. White Part No. 500-20736) For checking inlet pressures to the heaters.

WARNING
Electrical Shock and Burn Hazard

- Troubleshooting this system may require operating the heater with the burner on. Use extreme caution when working on the heater.
- Failure to follow this warning may result in property damage, personal injury or death.

INITIAL PREPARATION

1. Visually inspect equipment for apparent damage.
2. Check all wires and gas hoses for abrasion and wear. Replace any that are suspect.
3. Make sure the heater is properly installed and meets minimum clearances to nearest combustible materials. (Refer to dataplate on the heater, also on page 4 of this manual.)

Heater Problems — Page

1. Heater does not light 20
2. Heater lights, but will not stay lit 21
3. Burner flame extending beyond outer cone or black soot on inside of canopy 22

Components should be replaced only after each step has been completed and replacement is suggested in the flow chart. Refer to the "Servicing" sections as necessary to obtain information on disassembly and replacement procedures of the component once the problem is identified by the flow chart.

OPERATION SEQUENCE:

- A call for heat occurs from building thermostat.
- Line voltage is sent from building's temperature control to heater's ON/OFF switch.
- Switch sends power to ignition control through high limit switch when positioned to ON.
- Ignition control module begins ignition trial sequence
  - Ignition control sends high voltage to igniter electrode
  - Igniter sparks
  - Gas control solenoid opens
- Ignition occurs
  - Igniter continues to spark for 10 seconds until flame proving occurs
  - Ignition spark is shut off
  - Gas control solenoid stays open
- Ground warms to desired temperature
  - Building thermostat is satisfied
  - Heater shuts down
- Process is repeated on a call for heat

IGNITION FAILURE SEQUENCE:

- Ignition control will make three ignition trials
  - Each trial lasts 10 seconds
  - 15 seconds time span between each trial
- If ignition control does not establish flame sense within ignition trial:
  - Ignition spark shuts off
  - Gas valve closes
- After three ignition trials, ignition control will wait for 15 minutes before retrying for ignition.
- This process will be repeated continually until the ignition problem is solved.
- To manually reset the ignition control:
  - Unplug the heater and plug it back in

    OR
  - Turn the building temperature to off and then back on.

Problem 1

Heater Does Not Light

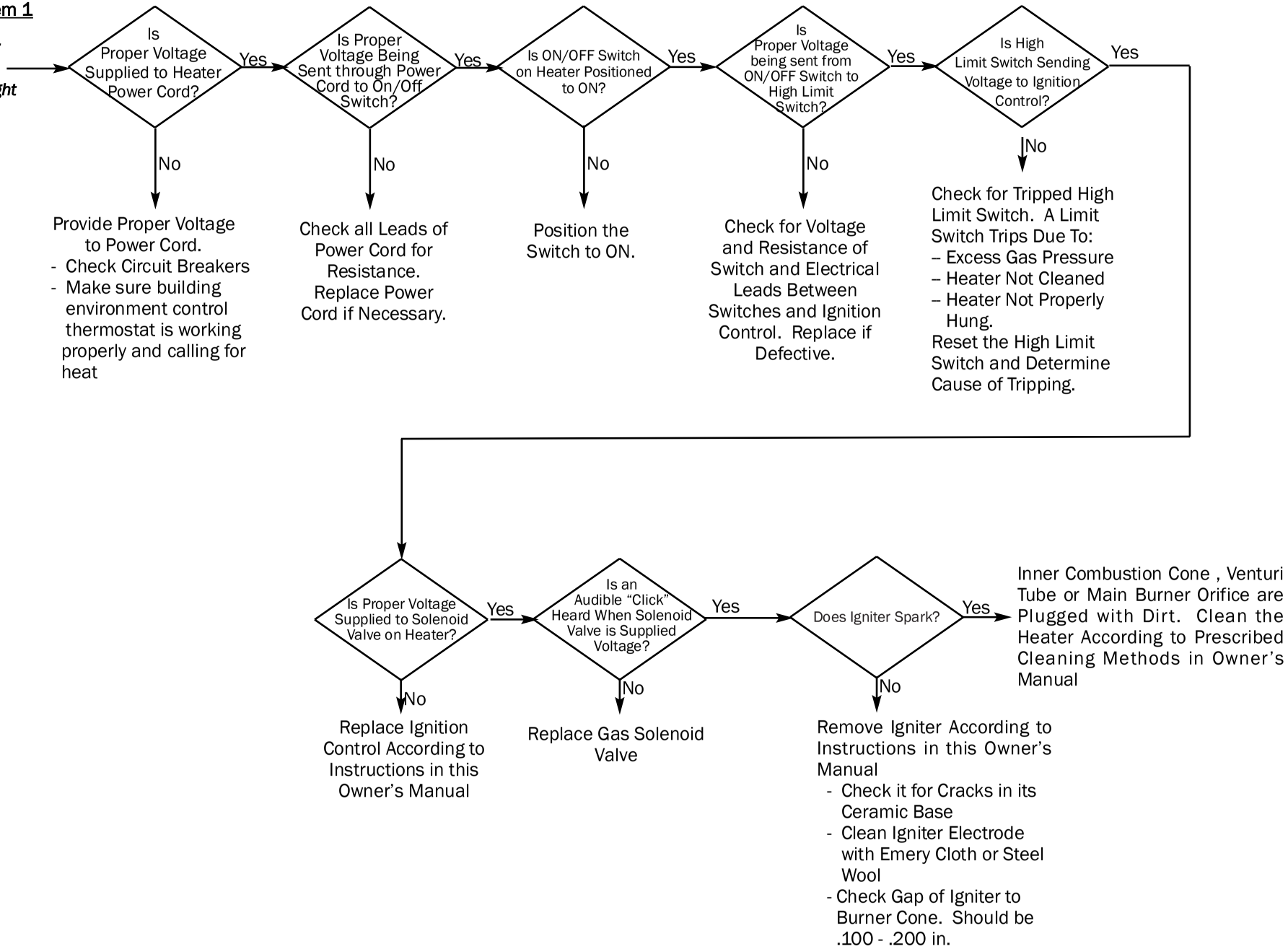

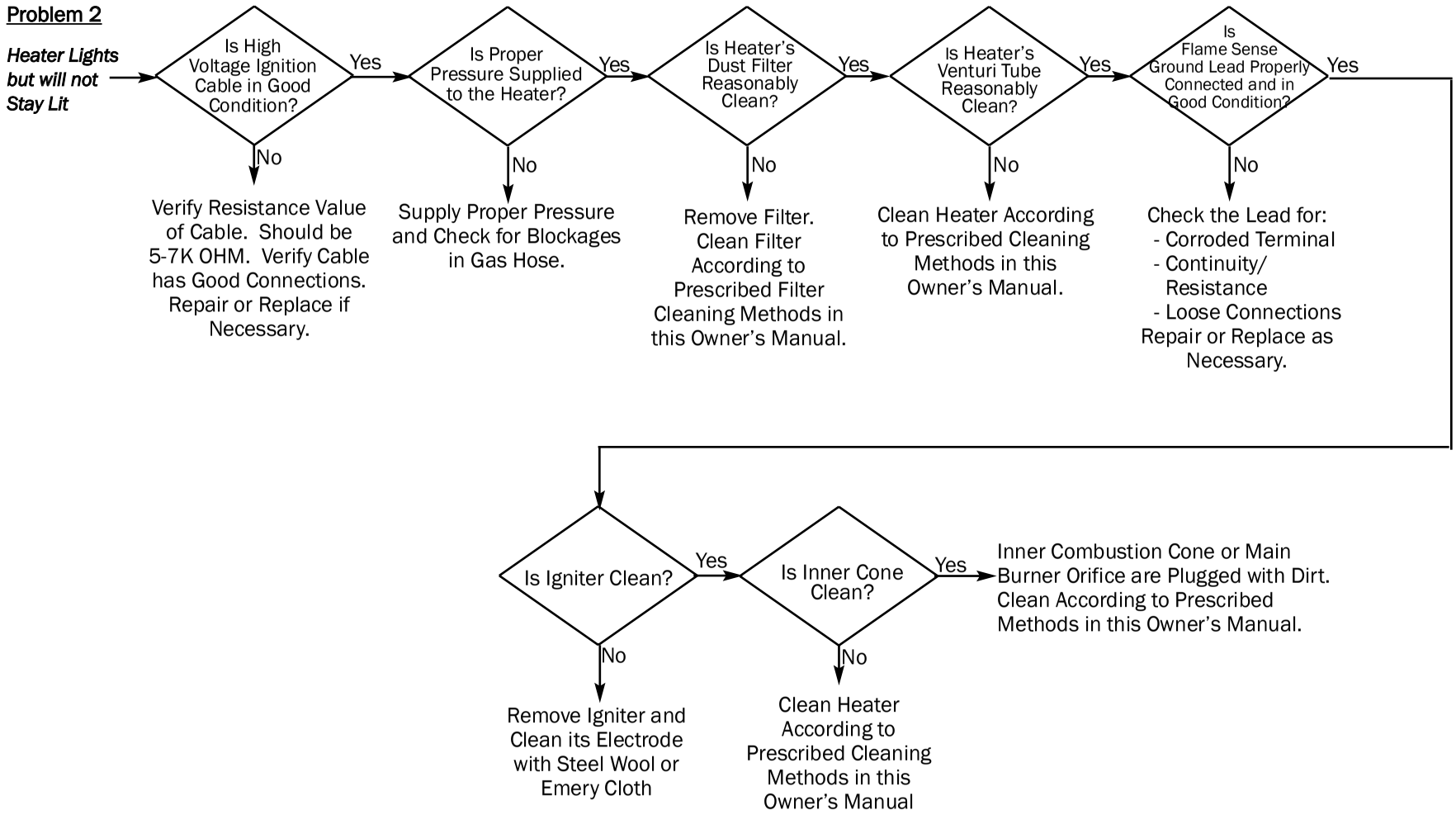
Problem 2
Heater Lights but will not Stay Lit
Is High Voltage Ignition Cable in Good Condition?
Yes
No
Verify Resistance Value of Cable. Should be 5-7K OHM. Verify Cable has Good Connections. Repair or Replace if Necessary.
Is Proper Pressure Supplied to the Heater?
Yes
No
Supply Proper Pressure and Check for Blockages in Gas Hose.
Is Heater's Dust Filter Reasonably Clean?
Yes
No
Remove Filter. Clean Filter According to Prescribed Filter Cleaning Methods in this Owner's Manual.
Is Heater's Venturi Tube Reasonably Clean?
Yes
No
Clean Heater According to Prescribed Cleaning Methods in this Owner's Manual.
Is Flame Sense Ground Lead Properly Connected and in Good Condition?
Yes
No
Check the Lead for:
- Corroded Terminal
- Continuity/ Resistance
- Loose Connections
Repair or Replace as Necessary.
Is Igniter Clean?
Yes
No
Remove Igniter and Clean its Electrode with Steel Wool or Emery Cloth
Is Inner Cone Clean?
Yes
No
Clean Heater According to Prescribed Cleaning Methods in this Owner's Manual
Inner Combustion Cone or Main Burner Orifice are Plugged with Dirt. Clean According to Prescribed Methods in this Owner's Manual.

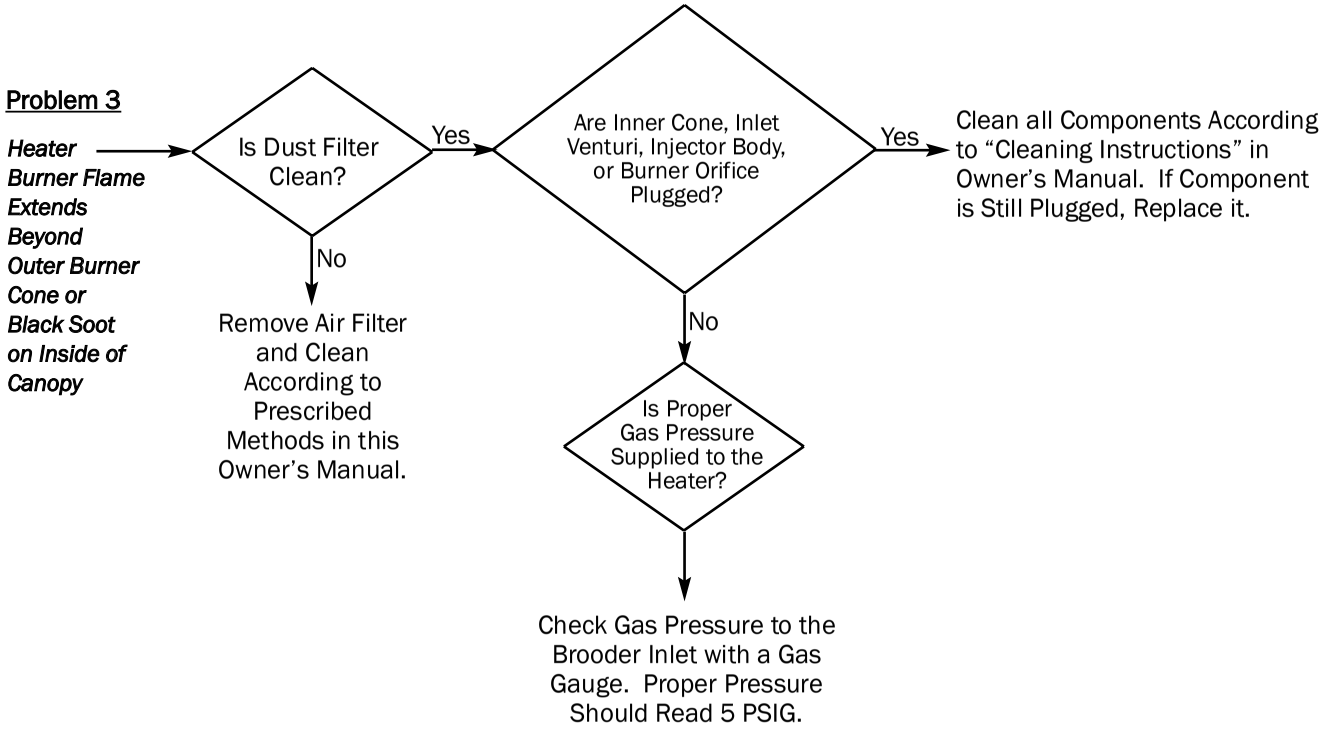
Problem 3
Heater Burner Flame Extends Beyond Outer Burner Cone or Black Soot on Inside of Canopy
Is Dust Filter Clean?
Yes
No
Remove Air Filter and Clean According to Prescribed Methods in this Owner's Manual.
Are Inner Cone, Inlet Venturi, Injector Body, or Burner Orifice Plugged?
Yes
Clean all Components According to "Cleaning Instructions" in Owner's Manual. If Component is Still Plugged, Replace it.
No
Is Proper Gas Pressure Supplied to the Heater?
Check Gas Pressure to the Brooder Inlet with a Gas Gauge. Proper Pressure Should Read 5 PSIG.

Electrical Connection and Ladder Diagram

CAUTION: REFER TO THE HEATER'S ELECTRICAL CONNECTION DIAGRAM WHEN SERVICING TO AVOID WIRING ERRORS AND HEATER MALFUNCTION. CHECK FOR PROPER OPERATION AFTER SERVICING.

WARNING: THIS HEATER MAY START AT ANY TIME

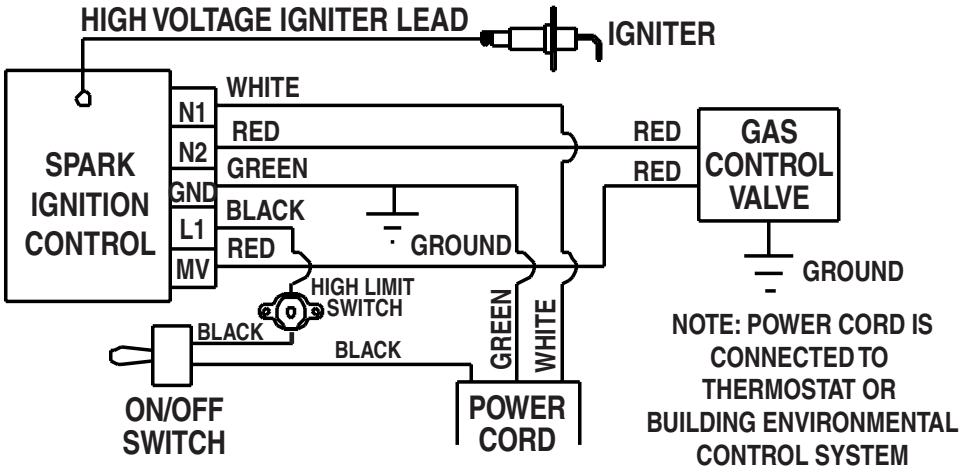

ELECTRICAL CONNECTION DIAGRAM

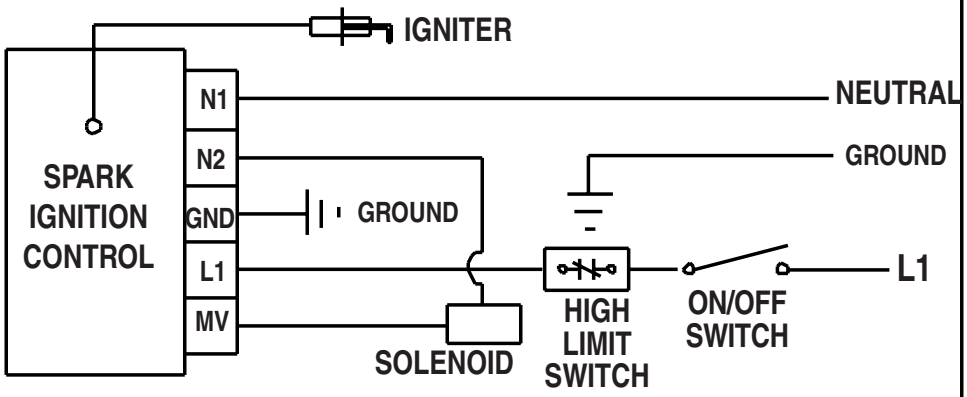

ELECTRICAL CONNECTION DIAGRAM

IF ANY OF THE ORIGINAL WIRE AS SUPPLIED WITH THE HEATER MUST BE REPLACED, IT MUST BE REPLACED WITH WIRING MATERIAL HAVING A TEMPERATURE RATING OF AT LEAST 302°F (150°C)

Heater Component Function

Burner Orifice
Metering device used to feed gas to combustion cones at a specific flow rate.

Double Combustion Chamber
Made of special alloy steel. This is where combustion of gas occurs, providing radiant heat used in the warming process.

Gas Control Valve
Component that houses electromagnet which is energized by voltage and therefore opens or closes to supply or shut off the flow of gas to the burner.

Gas Hose
Flexible connector used to convey gas from gas supply line to inlet of heater.

High Limit Switch
Safety device wired into the heater's electrical supply which is used to open the electrical circuit to the ignition control module in the event of an overheat condition.

Igniter
Electrical ignition device used on automatic ignition control systems. Ignites gas by spark.

Ignition Control Module
Electronic device which controls the ignition sequence and operation of the heater.

Injector Body
Allows combustion air to be drawn in to injector tube with gas flow for combustion.

Injector Tube
Tubular steel neck connecting the gas control valve and burner orifices to the combustion cones. Gas is fed to the combustion cones through the injector tube.

Manual Shut Off Valve
It's purpose is to shut off gas flow to the appliance if maintenance or service are required, or if an emergency situation occurs. When the handle on the manual valve is turned parallel to gas flow, the valve is completely open delivering full gas supply to the appliance. Turning handle perpendicular (90°) to gas flow shuts off gas flow.

On/Off Switch
Simple electrical device used to connect or disconnect incoming voltage at the ignition control box on the heater.

Shroud
Reflective aluminum heat shield for heater.

Parts Identification

PARTS SCHEMATIC

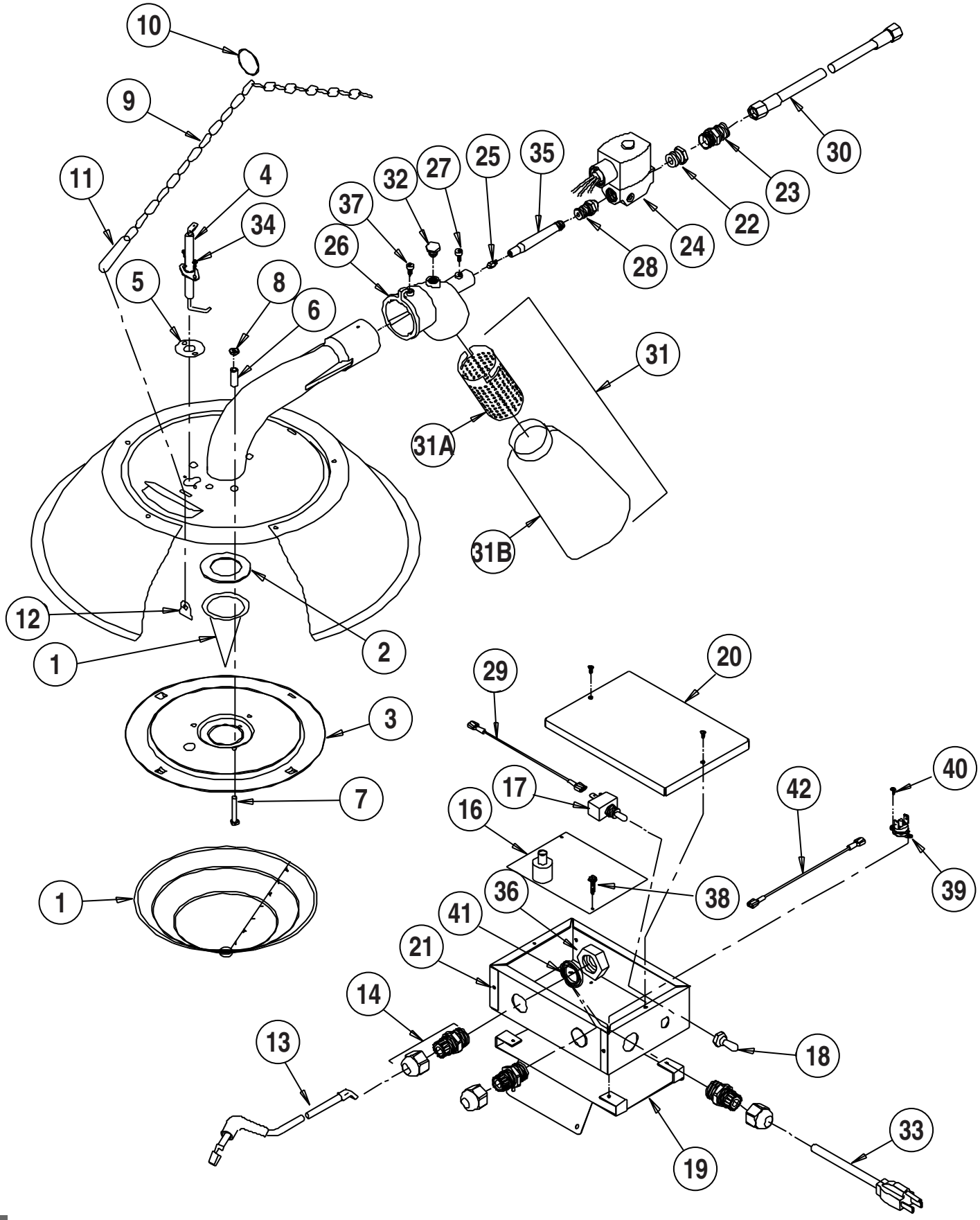

Item	Description		Model I17	Model I34
1	Inner Cone		130-09585	130-09557
	Outer Cone		130-09588	130-09556
	Combustion Cone Kit with Gasket		500-21087	500-21088
2	Gasket		130-09586	130-09560
3	Plate, Burner		130-21953-03	130-22212-03
4	Igniter		120-22612	
5	Cover, Igniter Mounting		220-22786	
6	Spacer		130-09568	
7	Screw 10-32 x 1 1/2		130-23636	
8	Nut 10-32		130-09578	
9	Chain Assembly		--	400-09566
10	Key Ring		130-09620	
11	Link, Chain Adjustment		--	130-09697
12	Clip, Chain Hanging		--	240-09567
13	Lead, Igniter w/ Boot		120-22703	
14	Connector, Liquid Tight		120-08948	
16	Control, Direct Spark Ignition		120-22715	
17	Switch, On/Off		120-22714	
18	Boot, On/Off Switch		130-09916	
19	Bracket, Control Box		225-22661	225-22616
20	Control Box Cover w/ Gasket		500-23180	
21	Control Box Bottom		500-23179	
22	Bushing		130-01544	
23	Adapter, Hose		310-01098	
24	Valve, Gas Control w/ Electrical Leads and Screen		400-22705	
25	Orifice, Burner	L.P. Gas	310-21562	310-20573
		Natural Gas	310-09776	310-21000
26	Injector Body w/ Air Register Plate	L.P. Gas	500-21838	500-20672
		Natural Gas	500-21837	500-21559
27	Retaining Screw for Injector Tube		130-09572	
28	Adapter 3/8 NPT x 1/8 BSP		310-22694	
29	Lead, Black, On/Off Switch to Ignition Control		120-22610	
30	Hose, Gas 1/4 in. x 6 ft. Rigid x Swivel, Poultry		400-20495	
	1/4 in. x 10 ft. Rigid x Swivel, Poultry		400-20496	
	1/4 in. x 12 ft. Rigid x Swivel, Poultry		400-20497	
	1/4 in. x 6 ft. Swivel Both Ends, Swine		400-20499	
	1/4 in. x 10 ft. Swivel Both Ends, Swine		400-20242	
	1/4 in. x 15 ft. Swivel Both Ends, Swine		400-20500	
31	Filter Kit		500-20427	500-20428
31A	Sleeve		400-20321	400-20421
31B	Filter		130-20361	130-20429
32	Plug		130-20358	
33	Cord, Power		120-22704	
34	Screw, Igniter Mounting		130-06658	
35	Tube, Injector		310-09597	
36	Lock Nut		120-08948	
37	Screw, Injector Body		130-09575	
38	Screw, Direct Spark Ignition		130-02330	
39	High Limit Switch, Manual Reset		120-23148	
40	Screw, High Limit Switch		130-22783	
41	Gasket, Liquid Tight		130-22565	
42	Wire, High Limit Switch		120-22610	

Warranty Policy

EQUIPMENT

L.B. White Co., Inc. warrants that the component parts of its equipment are free from defects in material and workmanship, when properly installed, operated, and maintained in accordance with the Installation and Maintenance Instructions, safety guides and labels contained with each unit. If, **within 12 months from the date of purchase by the end user**, any component is found to be defective, L.B. White Co., Inc. will at its option, repair or replace the defective part or equipment, with a new part or equipment, F.O.B., Onalaska, Wisconsin.

A warranty card on file at L.B. White will automatically qualify a unit and its component parts for warranty consideration. If a warranty card is not on file, a copy of the bill of sale will be required to establish warranty qualification. If neither is available, the warranty period will be 12 months from date of shipment from L B. White.

PARTS

L.B. White Co., Inc. warrants that replacement parts purchased from the company and used on the appropriate L. B. White equipment are free from defects both in material and workmanship for **12 months from the date of purchase by the end user**. Warranty is automatic if a component is found defective within 12 months of the date code marked on the part. If the defect occurs more than 12 months later than the date code but within 12 months from the date of purchase by the end user, a copy of a bill of sale will be required to establish warranty qualification.

The warranty set forth above is the exclusive warranty provided by L.B. White, and all other warranties, including any implied warranties or merchantability or fitness for a particular purpose, are expressly disclaimed. In the event any implied warranty is not hereby effectively disclaimed due to operation of law, such implied warranty is limited in duration to the duration of the applicable warranty stated above. The remedies set forth above are the sole and exclusive remedies available hereunder. L.B. White will not be liable for any incidental or consequential damages directly or indirectly related to the sale, handling or use of the equipment, and in any event L.B. White's liability in connection with the equipment, including for claims based on negligence or strict liability, is limited to the purchase price.

Some regions do not allow limitations on how long an implied warranty lasts, so the above limitation may not apply to you. Some regions do not allow the exclusion or limitation of incidental or consequential damages, so the above limitation or exclusion may not apply to you. This warranty gives you specific legal rights, and you may also have other rights which vary from state to state.

Replacement Parts and Service

Contact your local L.B. White dealer for replacement parts and service or call the L.B. White Company, Inc. at 1-800-345-7200 for assistance. Be sure that you have your heater model number when calling.